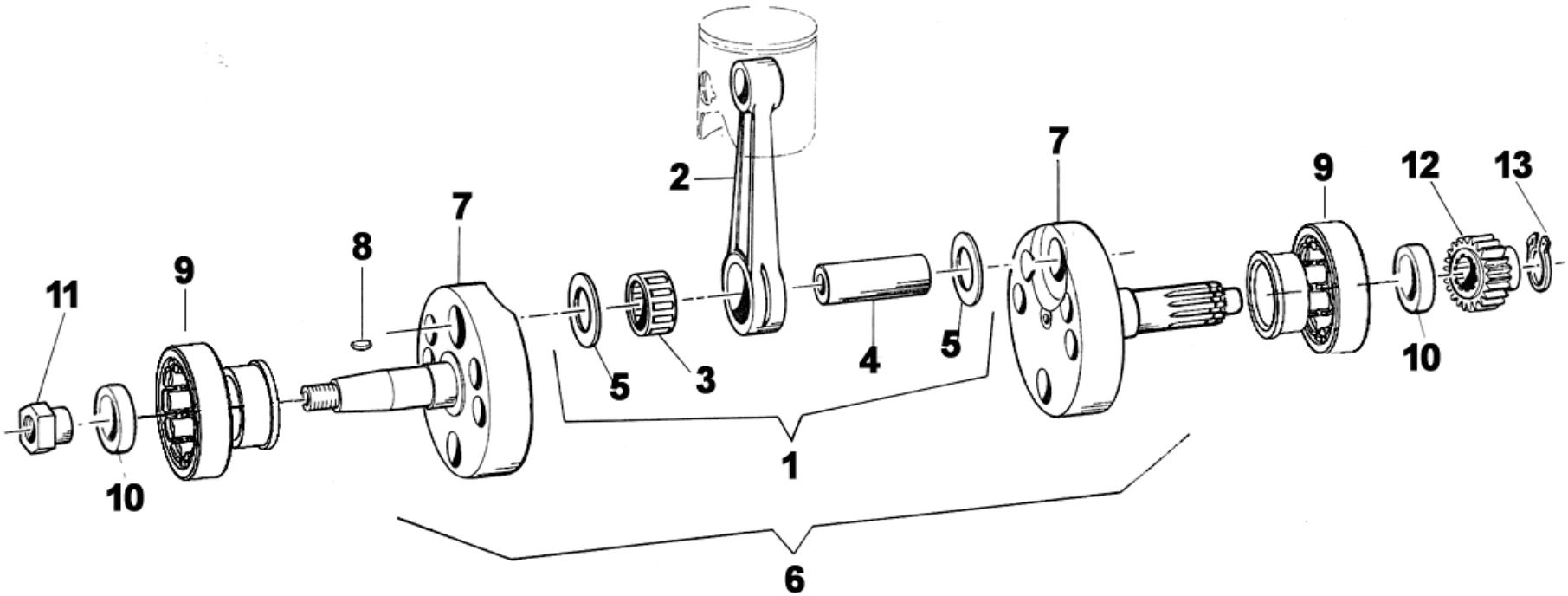
2
7
8
9
11
10
5
3
4
5
7
9
12
13
10
1
6

POS.	CODICE	Q.tà - Q.ty	KZ-R1	NOTE	DESCRIZIONE	DESCRIPTION
1	18125	1			BIELLA KZ 22 CPL ASSE F.6	CON ROD KIT WITH PIN 6mm HOLE
-	18125.1	-			BIELLA KZ 22 CPL ASSE F.7	CON ROD KIT WITH PIN 7mm HOLE
-	18125.2	-			BIELLA KZ 22 CPL ASSE F.5	CON ROD KIT WITH PIN 5mm HOLE
-	18125.3	-			BIELLA KZ 22 CPL ASSE PIENO	CON ROD KIT WITH SOLID PIN
-	18125.8	-			BIELLA KZ 22 CPL ASSE F.8	CON ROD KIT WITH PIN 8mm HOLE
2	18053.2	8			BIELLA D.22 FORG. NUDA 109,8	CON ROD
3	17015	1			GABBIA ARGENTATA 222815	SILVER BEARING
4	18091	1			ASSE ACCOP. 22 X 50.4 F.6	PIN WITH 6mm HOLE
-	18091.1	-			ASSE ACCOP. 22 X 50.4 F.8	PIN WITH 8mm HOLE
-	18091.2	-			ASSE ACCOP. 22 X 50.4 F.7	PIN WITH 7mm HOLE
-	18091.3	-			ASSE ACCOP. 22 X 50.4 PIENO	PIN, SOLID
-	18025	-			ASSE ACCOP. 22 X 50.4 F.5	PIN WITH 5mm HOLE
5	18239	2			RONDELLA ARGENTATA D.22 X 1 v2	WASHER, SILVER
6	18273	1	R1		ALBERO MOTORE COMPLETO	CRANKSHAFT ASSY
7	18274	1	R1		COPPIA SEMIALBERI	CRANK LH + RH
8	49010	1			CHIAVETTA VOLANO	WOODFRUFF KEY
9	03029	2		BC1-1442 B	CUSCINETTO	BEARING
10	04000	2		20 X 35 X 7	PARAOLIO	OIL SEAL
11	49056	1			DADO ACCENS 100/TAG/KZ 125MX/E	NUT
12	40318	1	R1		PIGNONE COPPIA Z 18	PRIMARY GEAR 18 T
13	49216	1			SEEGER E20 PIGN.-CAMBIO-COPPIA	SEEGER